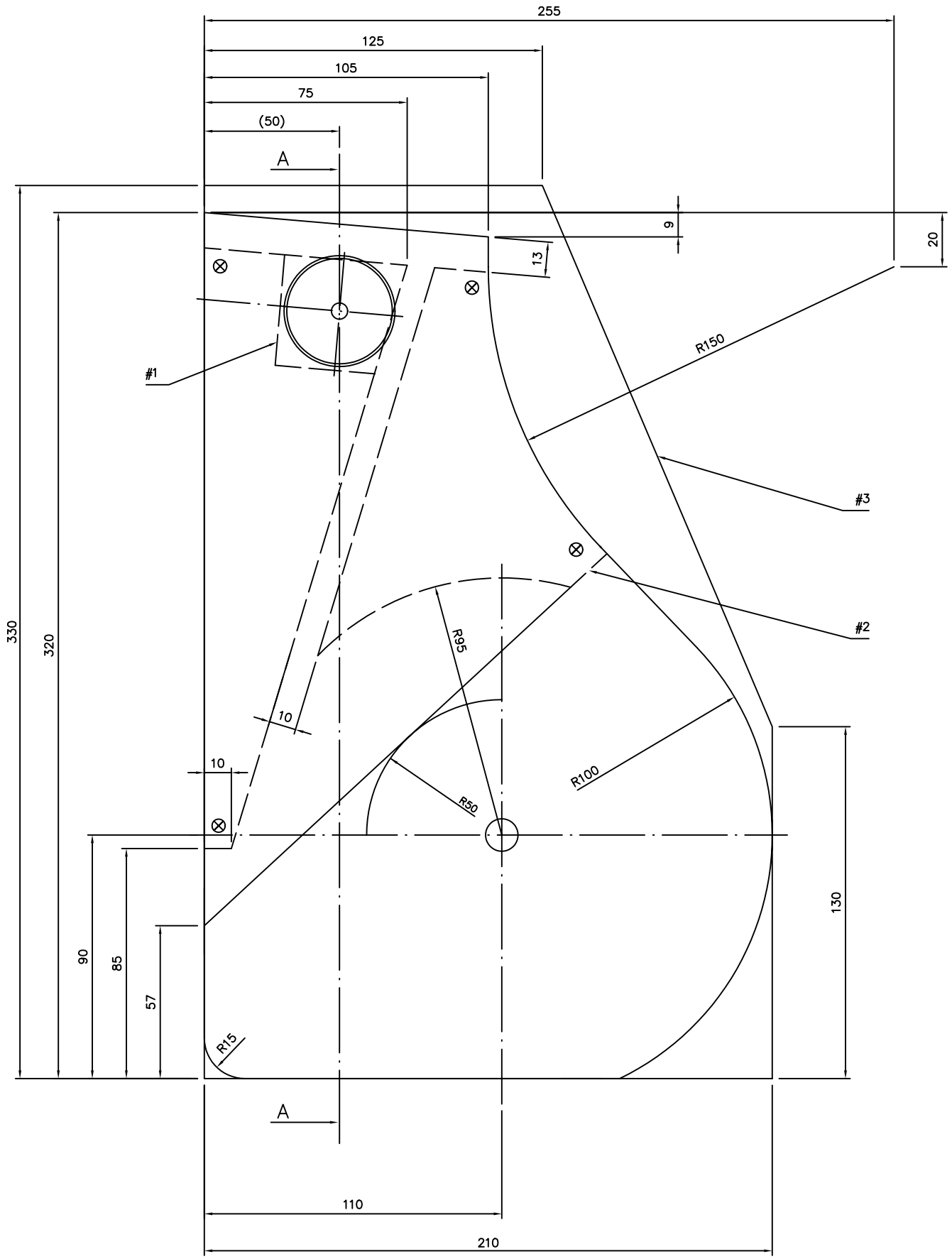


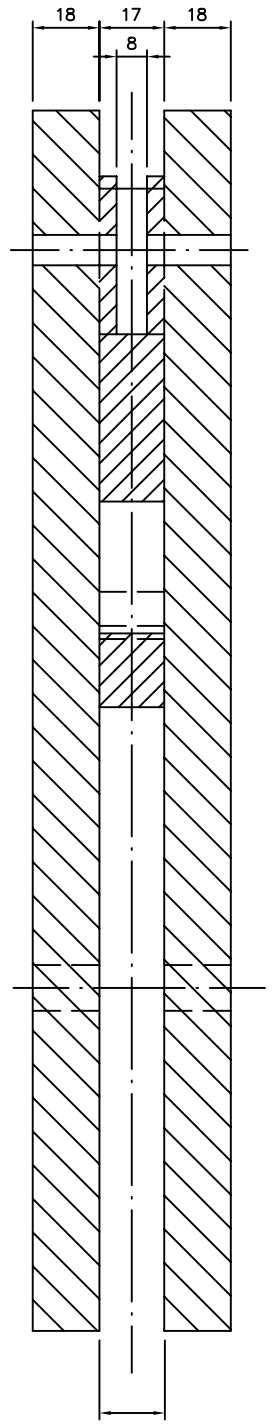


ADJUST TO RUDDER BLADE
TILPASSES RORBLAD

SECTION A–A
SNIT A–A

#1: CUT OUT AND CENTER POSITION TO SUIT ROLLER DIAMETER

#2: TO SUIT RUDDER BLADE

#3: KEEP STOCK INSIDE THIS LINE

⊗ SIGNATURE FOR THROUGH BOLT

#1: UDSKÆRING OG CENTERPLACERING TILPASSES RULLE DIAMETER

#2: TILPASSES RORBLAD

#3: RORHOVED SKAL LIGGE INDENFOR DENNE LINIE

⊗ SIGNATUR FOR GENNEMGÅENDE BOLT

| Item. | Object | Draw. no. | No. |
|---|---|---|---|

**Jens Konge**
HJORTEVEJ 16
DK 6715 ESBJERG N
Phone 75121646
Fax 75123436

Scale 1:1

| | |
|---|---|
| Date | 98.02.04. |
| Draw. | K |
| Conf. | |
| Matr. | |

WAYFARER
TRÆRORHOVED
MÅLTEGNING

WAYFARER
WODEN STOCK
MEASURED DRAWING

(Repl. for):
LT
1–WAY–0008
(Repl. by):